Eco Mining
Solar Mining Farm

Design v1.1

Original Design by: Patrick Nadeau Cutting Edge Ventures
Released Under: GPLv3

Copyright (C) 2025+ Patrick Nadeau Cutting Edge Ventures This program is free software: you can redistribute it and/or modify it under the terms of the GNU General Public License as published by the Free Software Foundation, either version 3 of the License, or (at your option) any later version. This program is distributed in the hope that it will be useful, but WITHOUT ANY WARRANTY; without even the implied warranty of MERCHANTABILITY or FITNESS FOR A PARTICULAR PURPOSE. See the GNU General Public License for more details. You should have received a copy of the GNU General Public License along with this program. If not, see <https://www.gnu.org/licenses/>.

Solar Mining Farm Design Goals

- ★ 100% Green, Self-Sufficient, Self-Contained - Portable / ReDeployable ✅
- ★ Minimal to no Building Code requirements due to portable nature and non-grid tied ✅
- ★ Able to break even in under 3 years ✅ (in Bull Market)
- ★ Lifespan of 15+ Years ✅ (Expected to be 30+ with Maintenance (battery rotation)
- ★ Ability to support Expansion ✅ (Internally and with additional Solar module Kits)
- ★ Able to support 5kw-7kw of continuous power draw ✅ (7kwh -> 20kwh with expansion kits) (30 amps @230v - 88 amps @230v)
- ★ Reusable design for non-Mining Farm Purposes ✅
- ★ Option to use Grid as Battery Augmentation / Backup ✅

<u>All of these design goals have been achieved!</u>

Phase I & II

Phase I - Complete

- Design & Build out container planning for expansion - Done
- Initial build with 50% Solar & 50% Battery Capacity - Done
- Leverage Grid Charging until batteries can cover 24x7 operations then use as backup - Done
- Validate Airflow, Humidity and Temperature management - Done
- Validate BiFacial Backside Production percentage increase - Done 9% consistent gain
- Design and Build customized brackets & Materials List - Done
- Build AI & API Integrations, Monitoring and Mining Farm Dashboard - Done

Phase II

- Full Solar Capacity - Done
- Full Battery Capacity - Done
- Finalize Software Platform & Monitoring - Done

Future Concepts to test

- Test 2 low cost suntracker systems I already bought (6 panels each)
- DC direct to Miners (removal of PSU's)
- Flywheel Storage in place of batteries for daily use (Lifetime life span)
- Cheaper Batteries
- Cheaper Solar Panels N-Type
- Cheaper Inverters
- Test White tarp around shipping container to increase reflection to underside of bifacial panels
- Test white stone around bifacial panels

40’ HC Shipping Container Layout

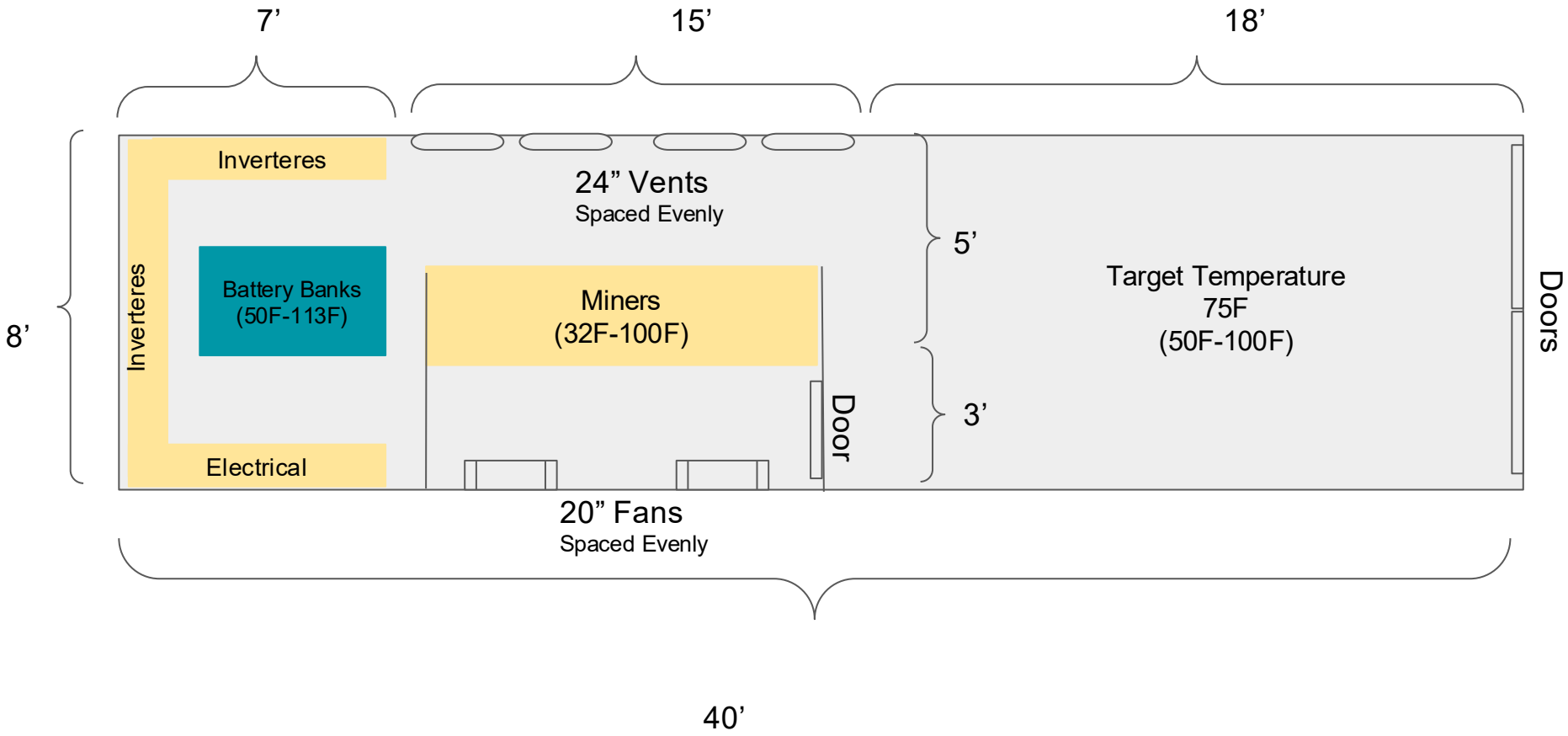

40’ HC Shipping Container
Side View

- Vents located under low side of panels to reduce moisture intake & debris
- Painted White for Bifacial Panels +2%
- 2’ riser on front to increase reflection to underside of panels for generation and snowmelt
- Container on painted concrete or white tarp on ground to increase reflection to underside of panels +3%

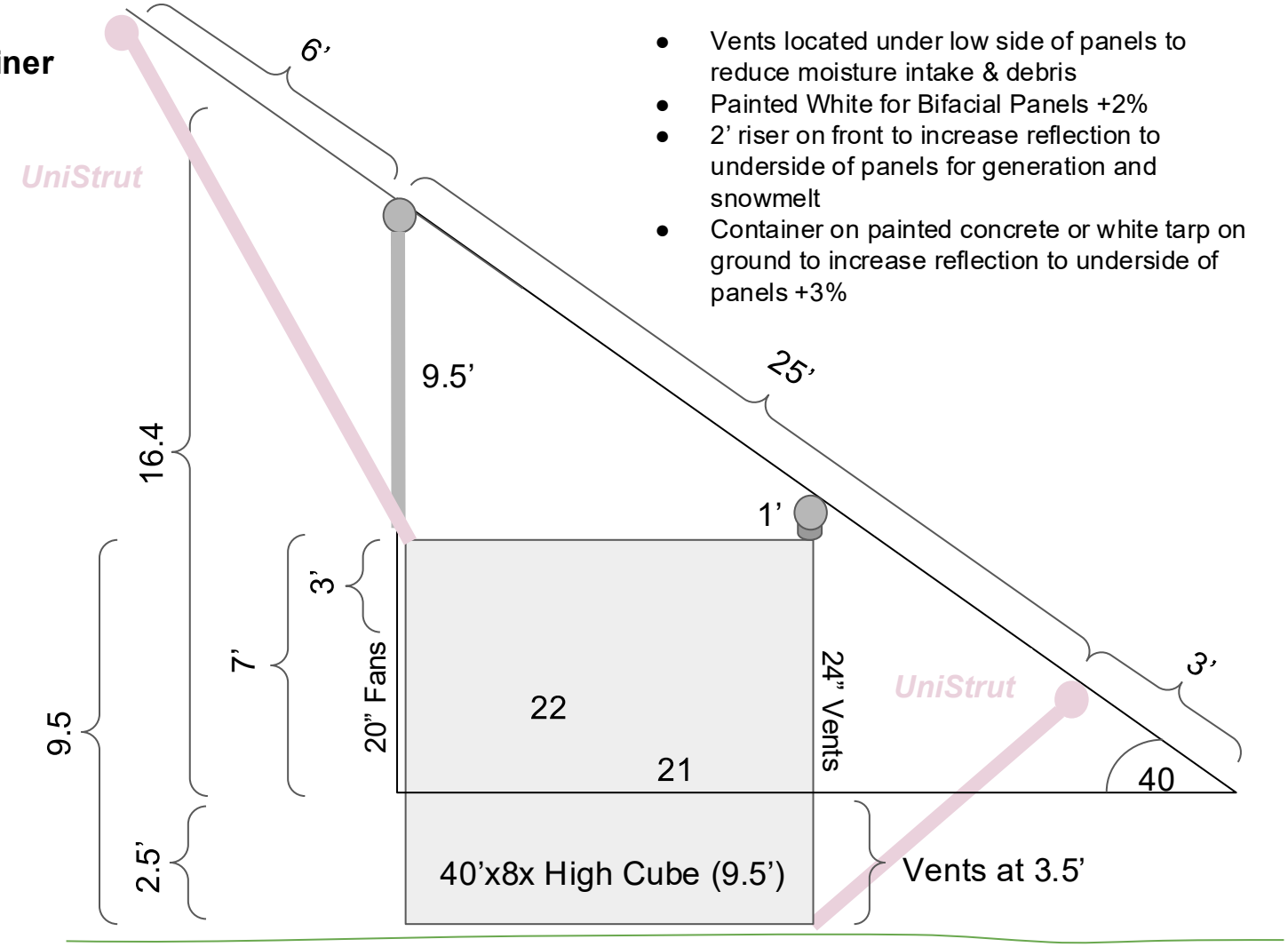

40’ HC Shipping Container Top View

- Sched 40 3” Galvanized Pipe
- IronRidge XR1000 17’ & 11’ rails

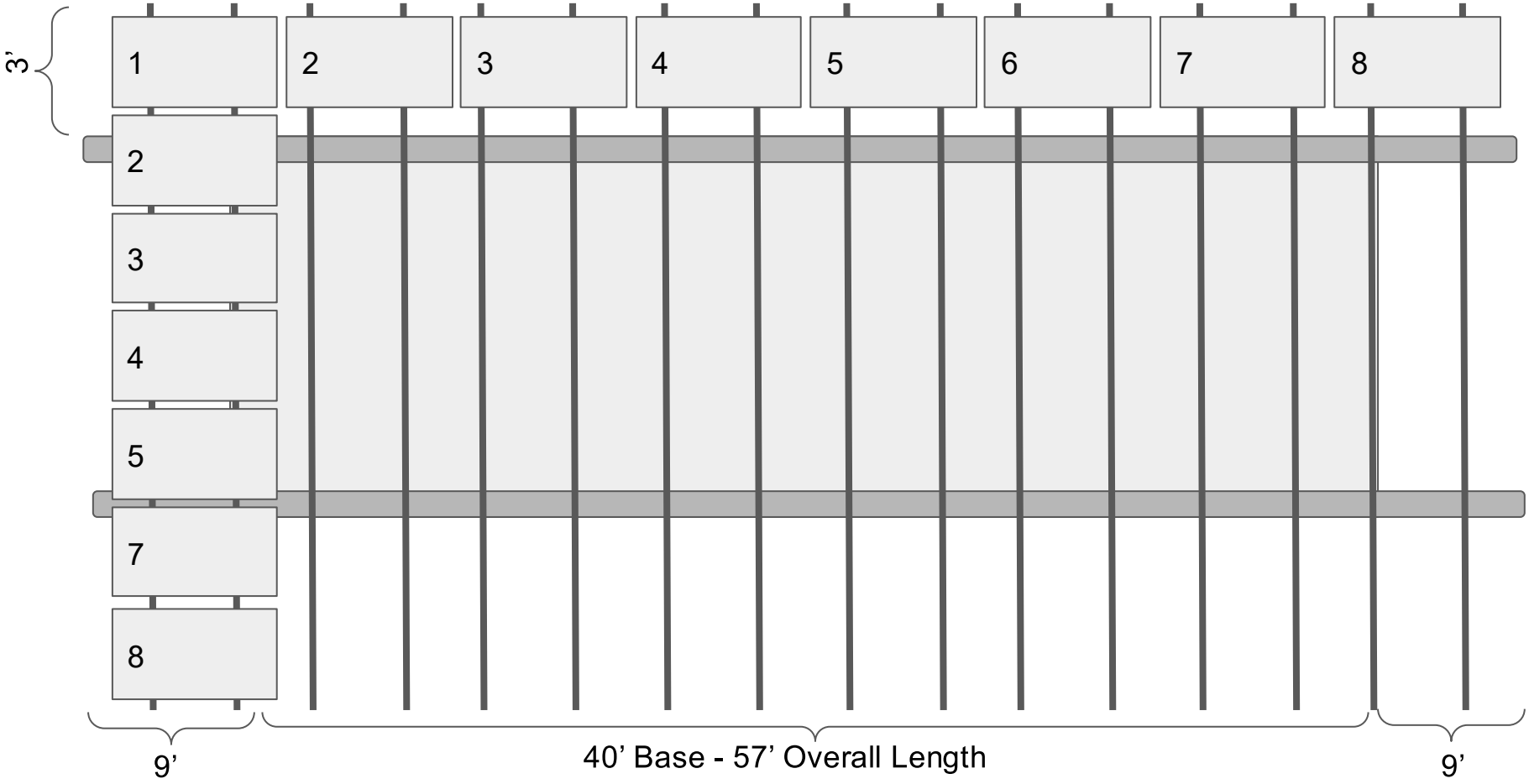

40’ HC Shipping Container Front View

- Sched 40 3” Galvanized Pipe
- IronRidge XR1000 17’ & 11’ rails

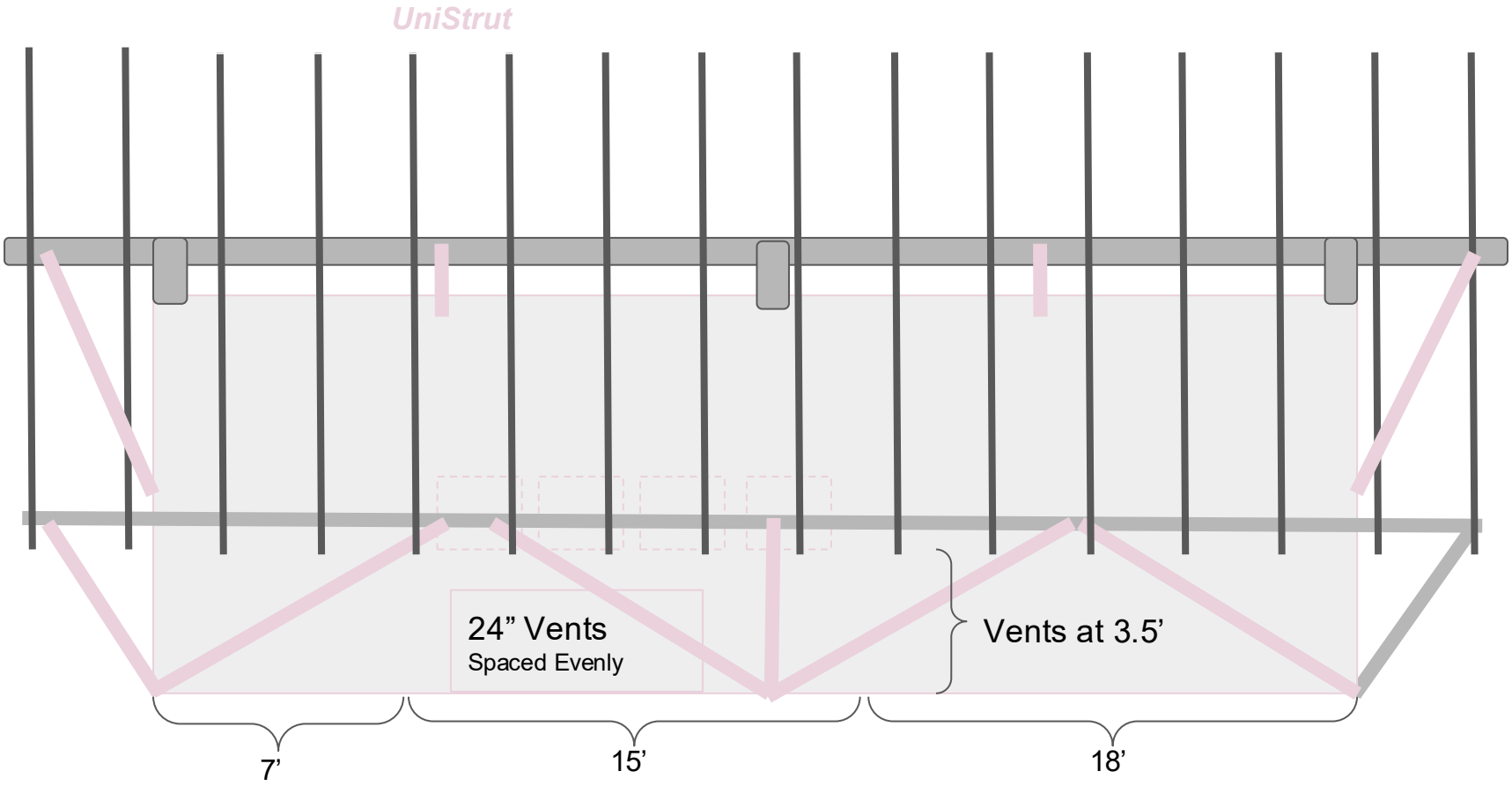

40’ HC Shipping Container Back View

- Sched 40 3” Galvanized Pipe
- IronRidge XR1000 17’ & 7-17’ rails

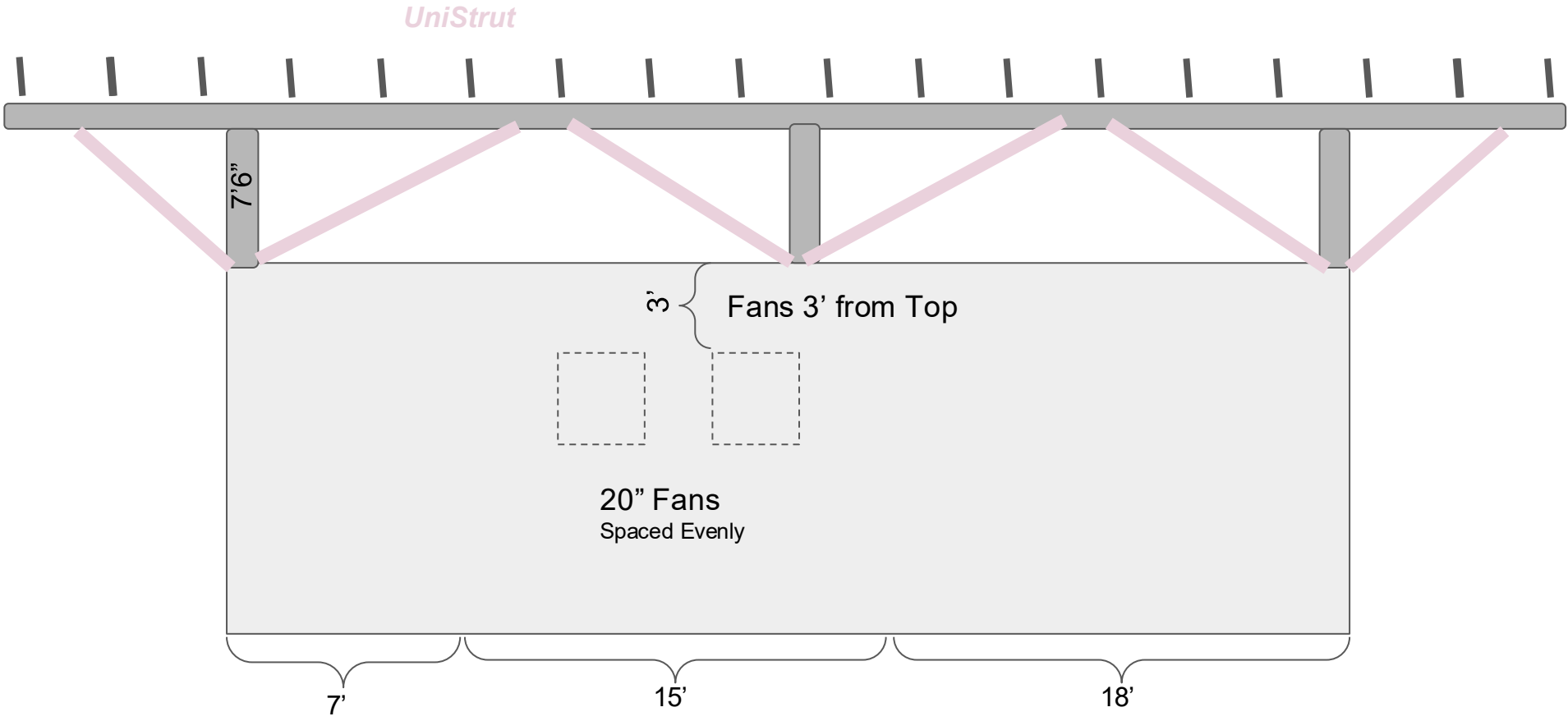

Welded Bracket Design

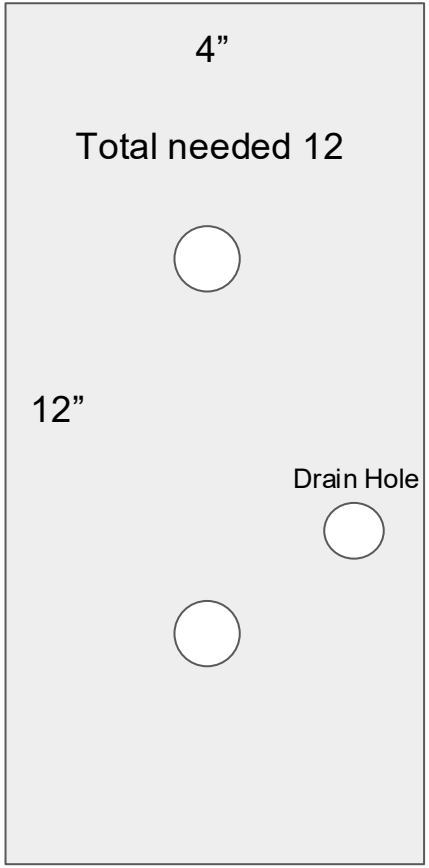

2 - 4Lx12Hx3/8 - Sides

4Wx4.75Lx3/8 - Side Plates

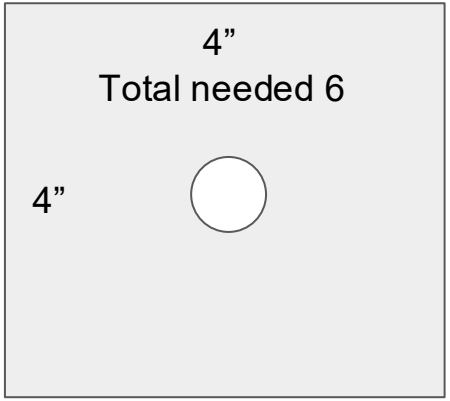

4Wx4.75Lx3/8 - Bottom Plate

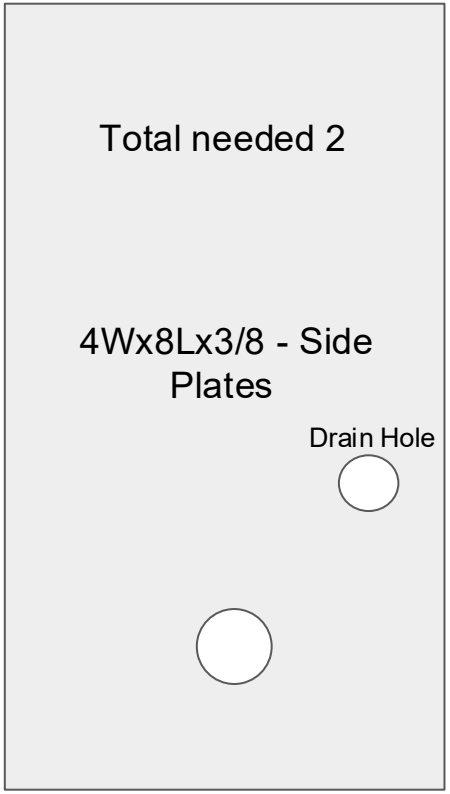

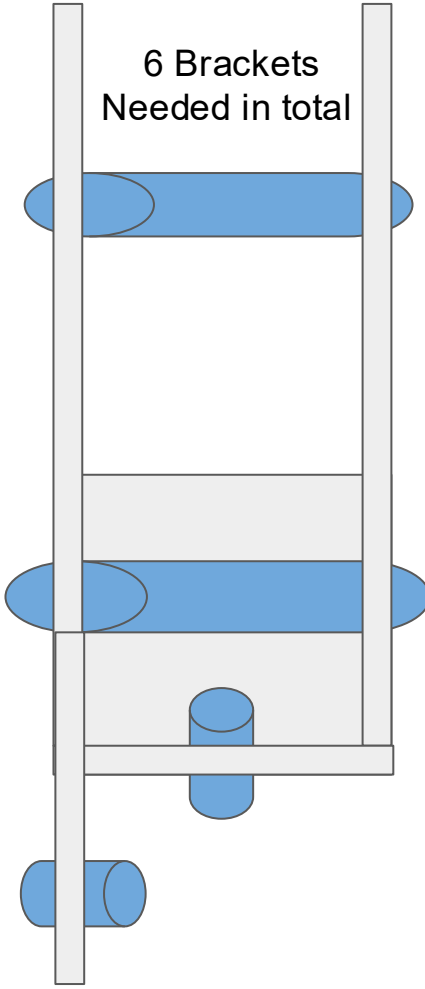

Welded Pipe Joiner & Support Design

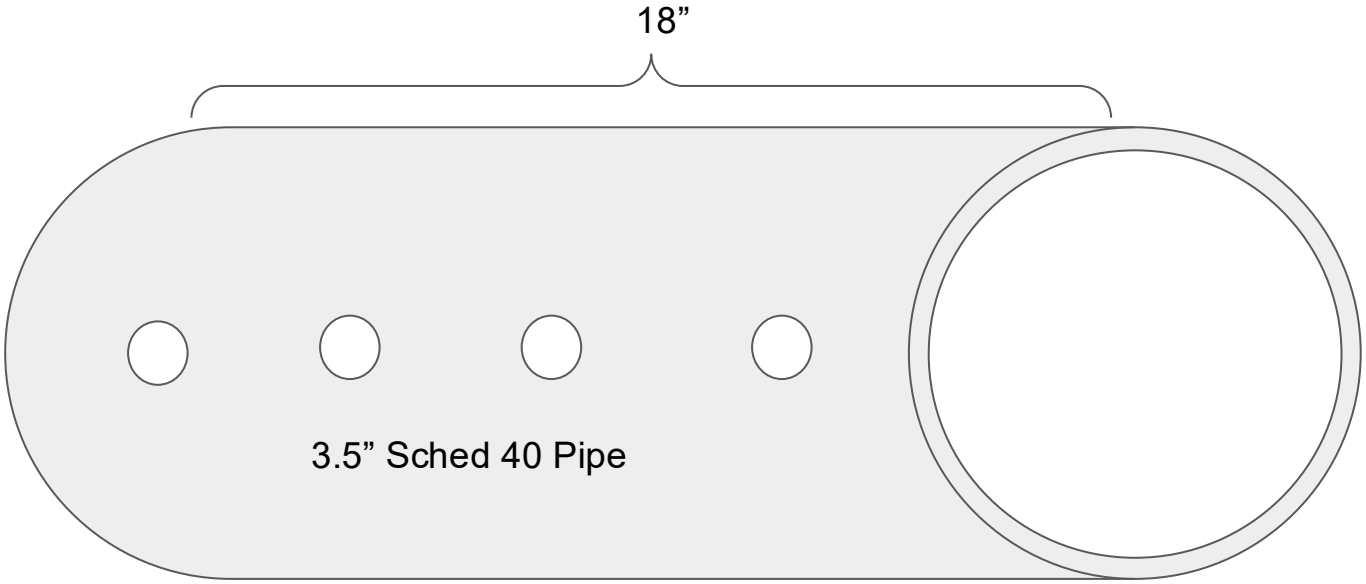

Electrical

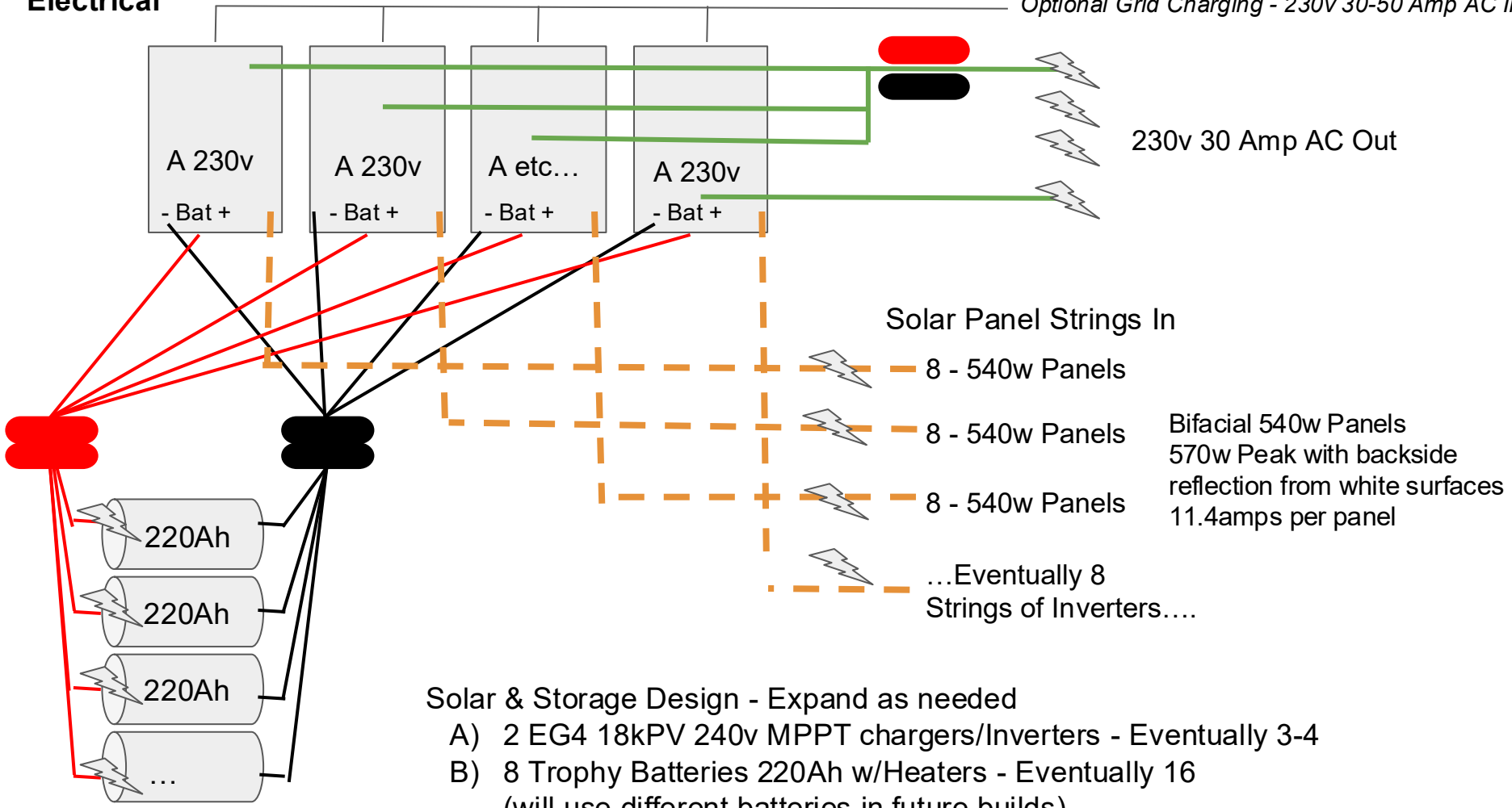

Solar & Storage Design - Expand as needed

A) 2 EG4 18kPV 240v MPPT chargers/Inverters - Eventually 3-4

B) 8 Trophy Batteries 220Ah w/Heaters - Eventually 16
(will use different batteries in future builds)

Electrical

BUS Bar

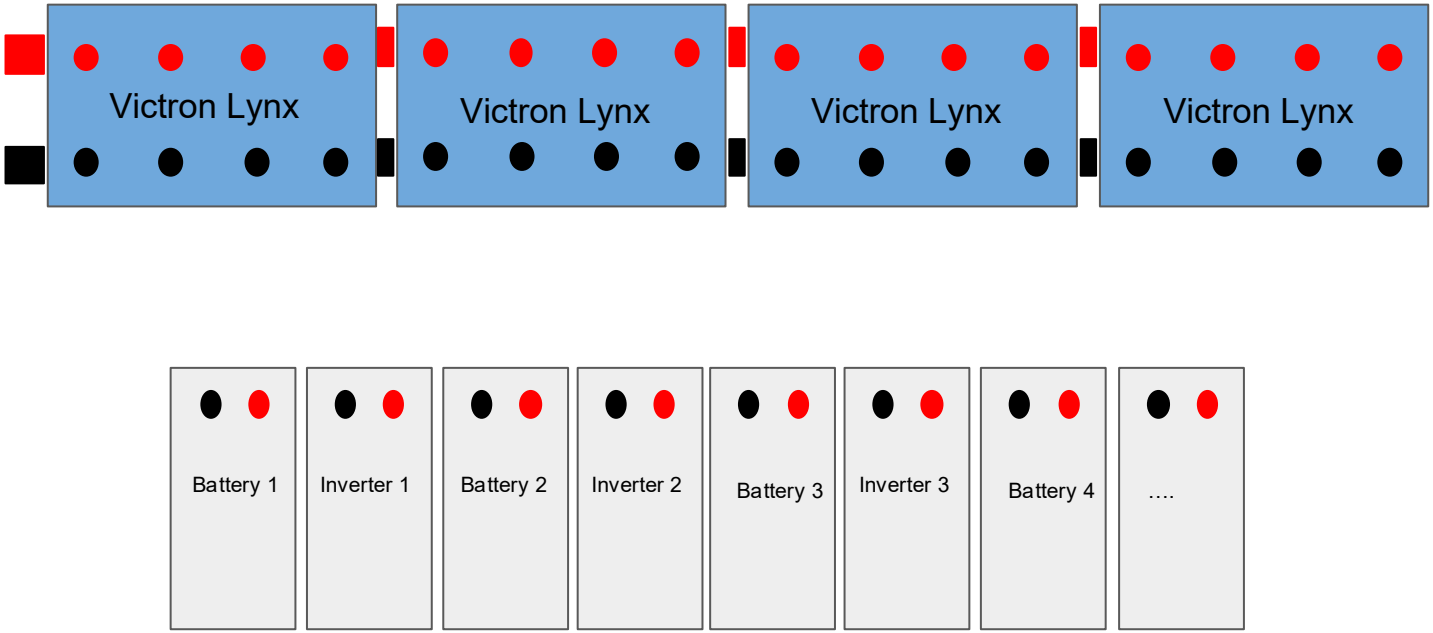

Solar Panel Wiring

String 1 in Series

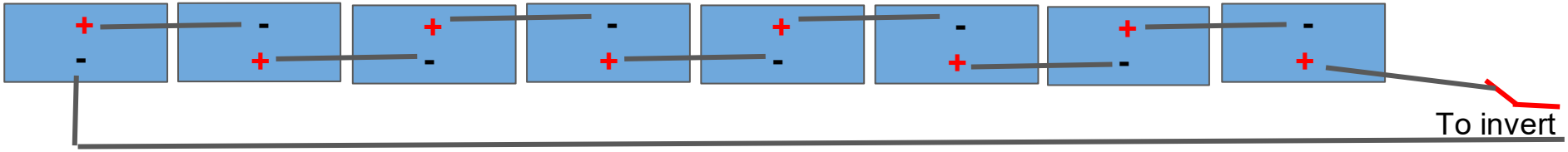

String 2...

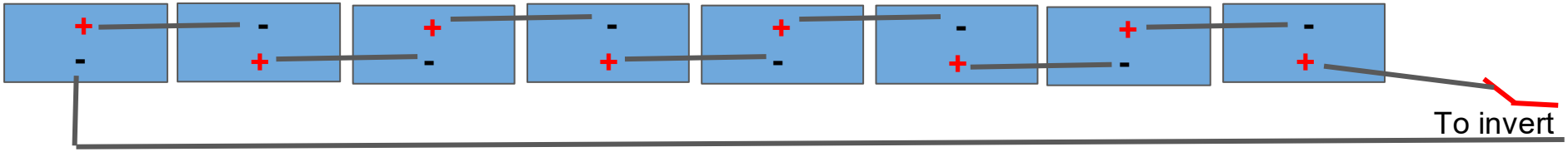

Solar Panel Strings In

8 Panels in Series
400v 11.4a = 4560w
8 - 540w-570w Panels total (240v)

Electronics, Mechanical, Materials List

- 40’ HC Shipping Container (High Cube 9.5’)
- Internet connection - MiFi, Starlink or Point to Point for 100% portable mobile solution
- TheMeterBox to monitor each circuits and distribute Power
- Optional Arduino/RapberryPi to remote monitor and execute hard power resets for each MeterBox or use Homekit, SmartThings or Alexa compatible plugs
- 24-48 Port Switch Gigabit Switch (TP-Link SG-1048)
- 20” Fan 3368 CFM 125Watts 120v - might need 2-4 depending on your climate
- 4-8 24” Vents for air intake / filters (2 for each Fan)
- Heavy Duty Hidden Shackle Lock (Warlok or Master)
- RV/Generator Outlet for optional Grid powered charging 220v 30-50Amp In (optional)
  (Using a plug keeps it “mobile” for most zoning codes)
- 2-2-2-4 wire for RV Outlet to power source (optional)
- 4 Corner Brackets for 3” pipe mounting to container (Custom Build - I might Sell these)
- 2 mid brackets for 3” pipe mounting to container (Custom Build - I might Sell these)
- 16 17’ IronRidge XR1000 Rails 90psf Snowload (could be XR100 depending on your geography)
- 16 14’ IronRidge XR1000 Rails (could be XR100 depending on your geography) - maximize solar array
- 8 21’ 3” Schedule 40 Galvanized Pipe for Horizontal supports and Vertical supports
- 4 18” 3.5” Schedule 40 Galvanized Pipe to join 3” Pipe
- 2” angle iron to frame out Vents & Fans
- 6 IronRidge 3” Pipe Top Caps
- IronRidge 3”pipe connectors 72
- MC4 Connectors
- 10awg Solar panel wiring ~200ft
- Trophy 220amp Server Rack Batteries
- Breaker box for inbound power incase of no solar production and/or not enough batteries
- Breaker box for 120v Distribution
- Breaker Box for 240v Distribution
- 20 amp Breakers for each Inverter on Power Out
- DIN Breaker box with breaker for each PV String
- Lot’s of Bolts

I have had 60mph winds and 9” of snow with no issues so far.

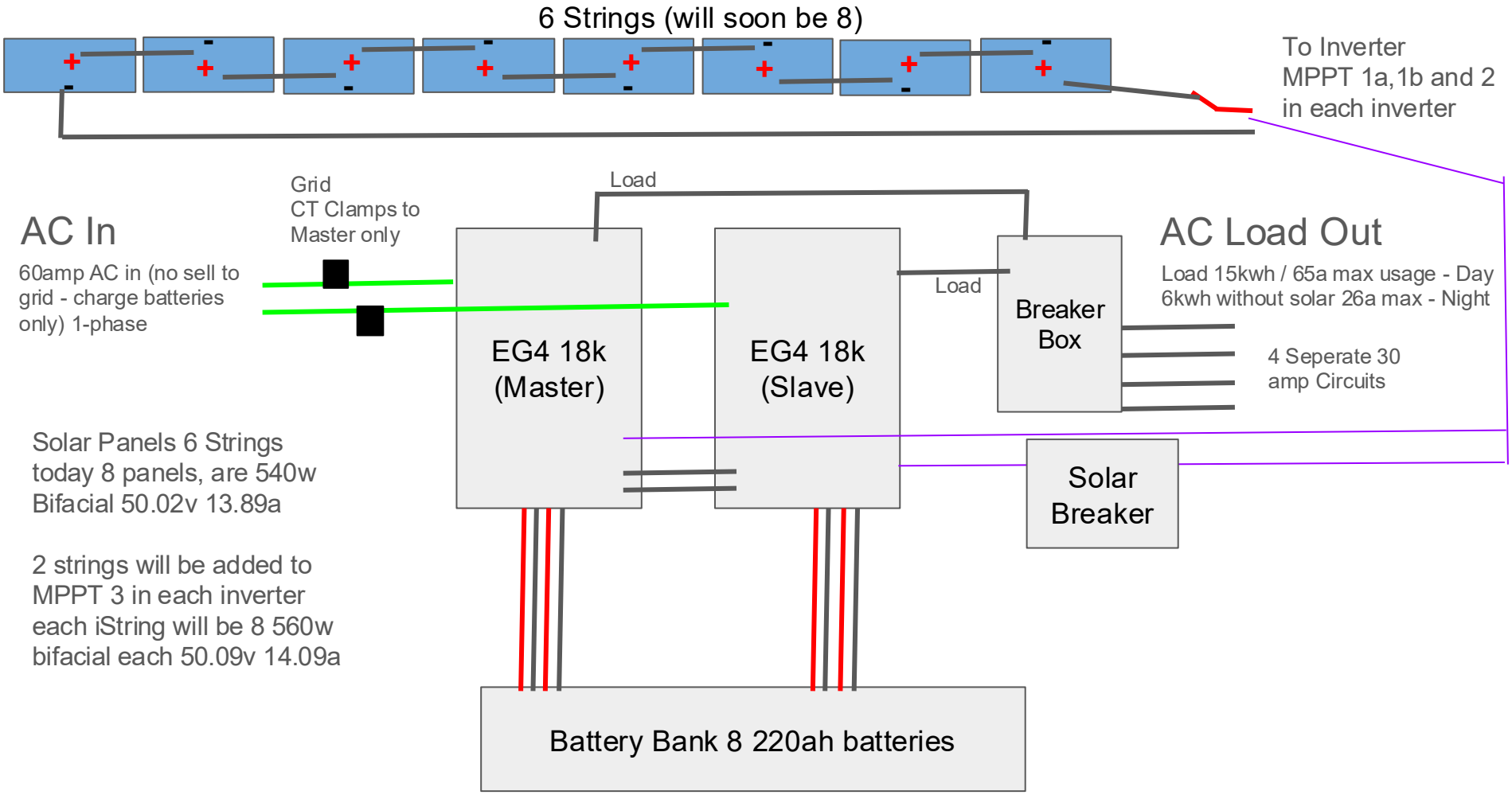
6 Strings (will soon be 8)
To Inverter
MPPT 1a,1b and 2
in each inverter
Grid
CT Clamps to
Master only
Load
AC In
60amp AC in (no sell to grid - charge batteries only) 1-phase
EG4 18k (Master)
EG4 18k (Slave)
Load
Breaker Box
AC Load Out
Load 15kwh / 65a max usage - Day
6kwh without solar 26a max - Night
4 Seperate 30 amp Circuits
Solar Panels 6 Strings
today 8 panels, are 540w
Bifacial 50.02v 13.89a
Solar Breaker
2 strings will be added to
MPPT 3 in each inverter
each iString will be 8 560w
bifacial each 50.09v 14.09a
Battery Bank 8 220ah batteries
8 Trophy Batteries (Pylontech CAN-Bus-protocol PYLON-v1.3) - 51.2v Nom 11,262wh each 90 kwh total